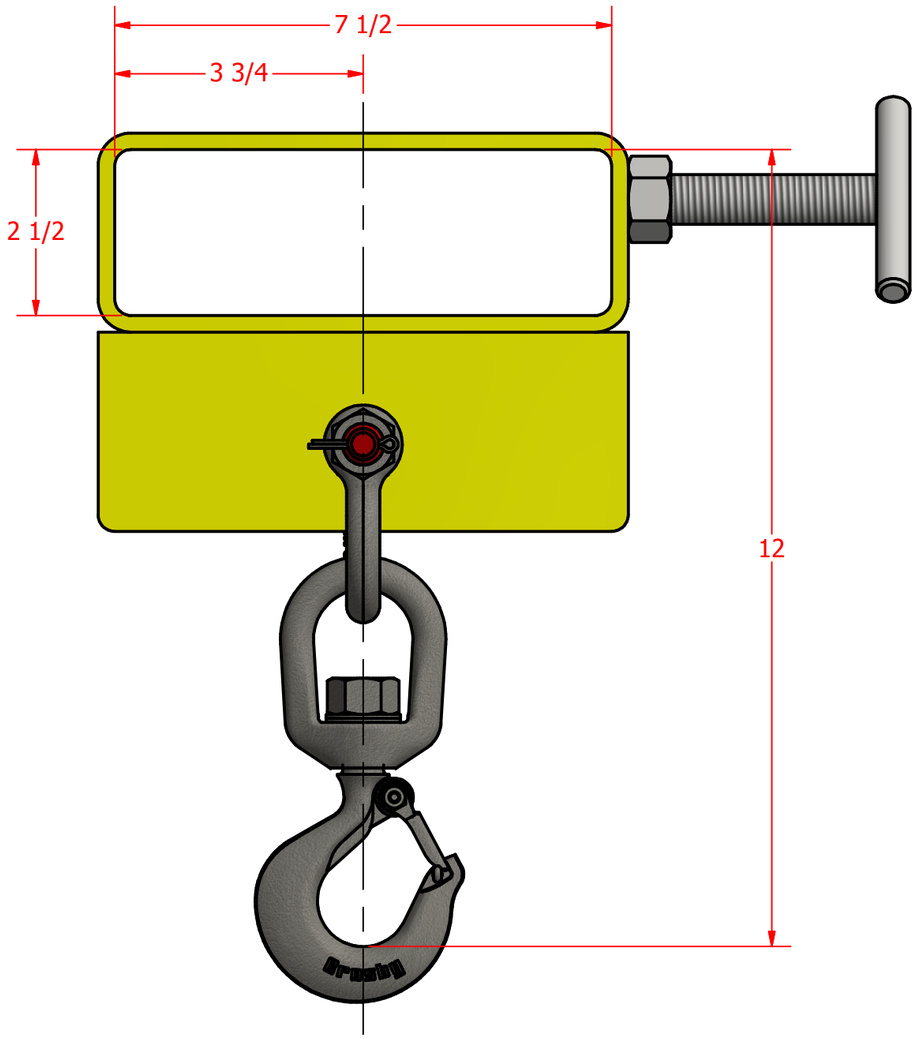

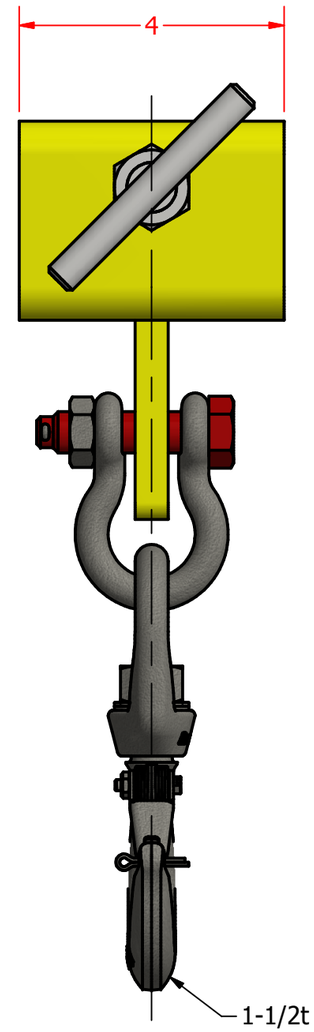

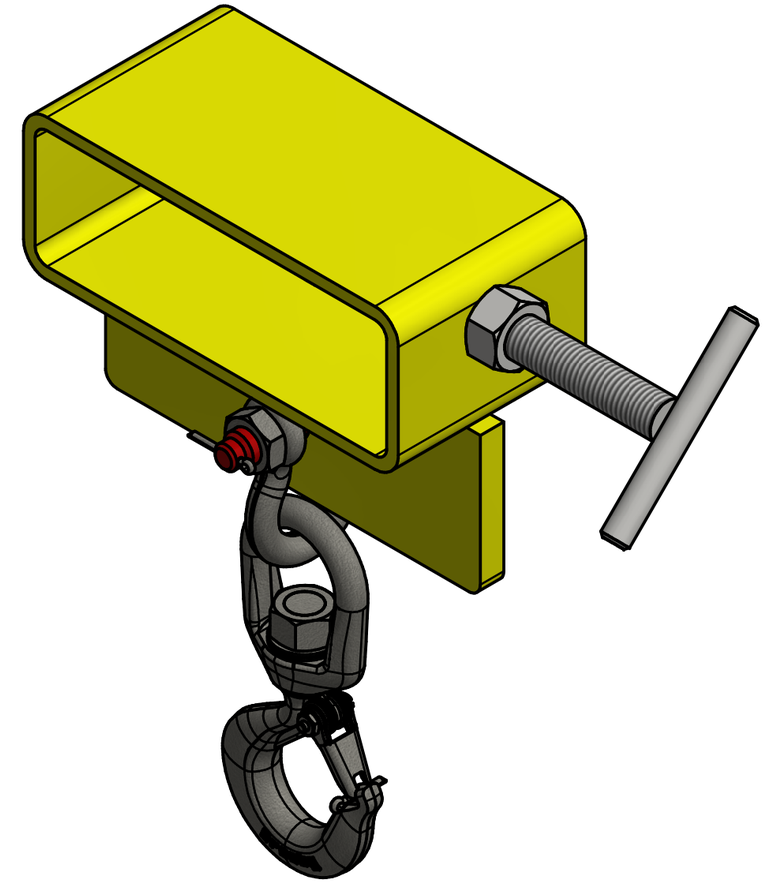

ALL DIMENSIONS ARE IN INCHES
UNLESS OTHERWISE SPECIFIED

ELT Inc. Engineered Lifting Technologies
3566 S. BENZING ROAD
ORCHARD PARK, NY 14127
1-888-ELT-LIFT
1-888-358-5438

SCALE: NTS

APPROX WEIGHT: 13 LB

TOLERANCES (UNLESS OTHERWISE SPECIFIED)		DATE	NAME
	DRAWN	4/16/13	M. FILION
	REVISED		
LINEAR .X = ±.1 .XX = ±.01 .XXX = ±.005 .XXXX = ±.0005 FRACTIONS `1/16 ANGULAR ±.5º	DESIGN CATEGORY B		
	SERVICE CLASS 1		
	1 OF 3		

LHC-7

3,000 LB WLL

DWG NO

REV.

CONFIDENTIAL PROPERTY
PROPRIETARY INFORMATION
THIS DOCUMENT IS CONFIDENTIAL PROPERTY AND PROPRIETARY INFORMATION BELONGING TO KINEDYNE d/b/a ENGINEERED LIFTING TECHNOLOGIES AND MAY NOT BE DUPLICATED, OR USED FOR REPROCUREMENT OR PUBLICLY DISCLOSED, EXCEPT WITH THE WRITTEN PERMISSION OF KINEDYNE d/b/a ENGINEERED LIFTING TECHNOLOGIES

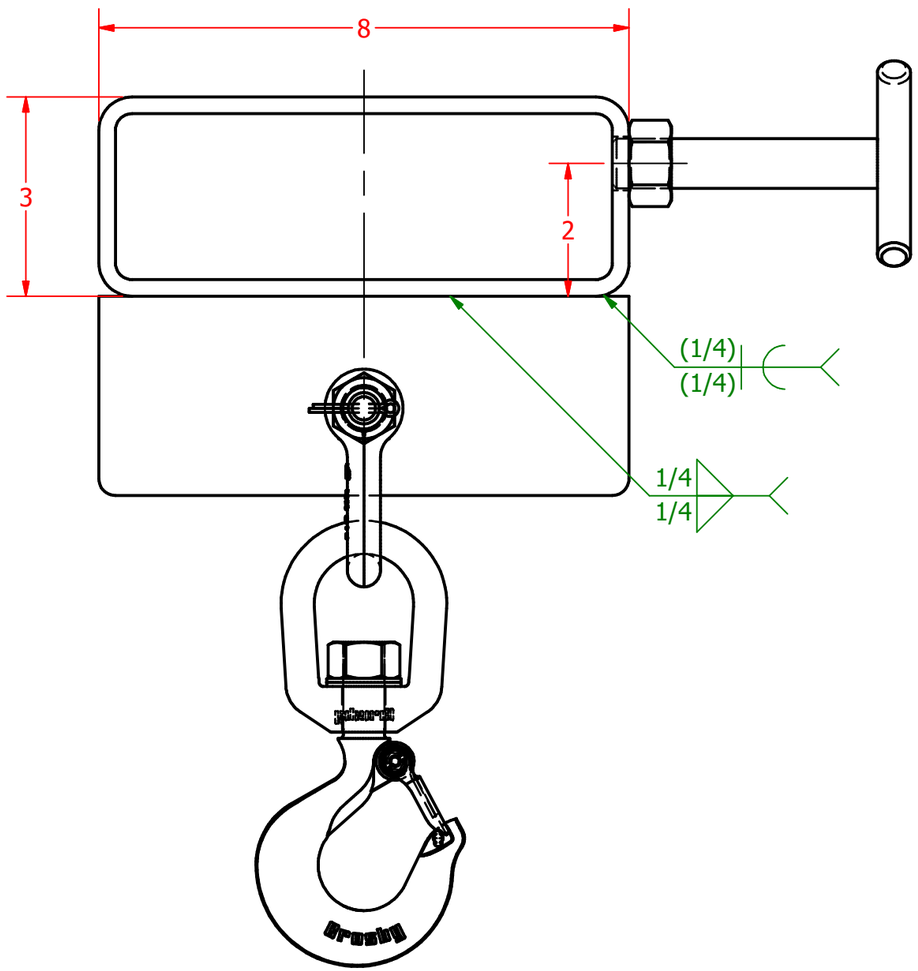

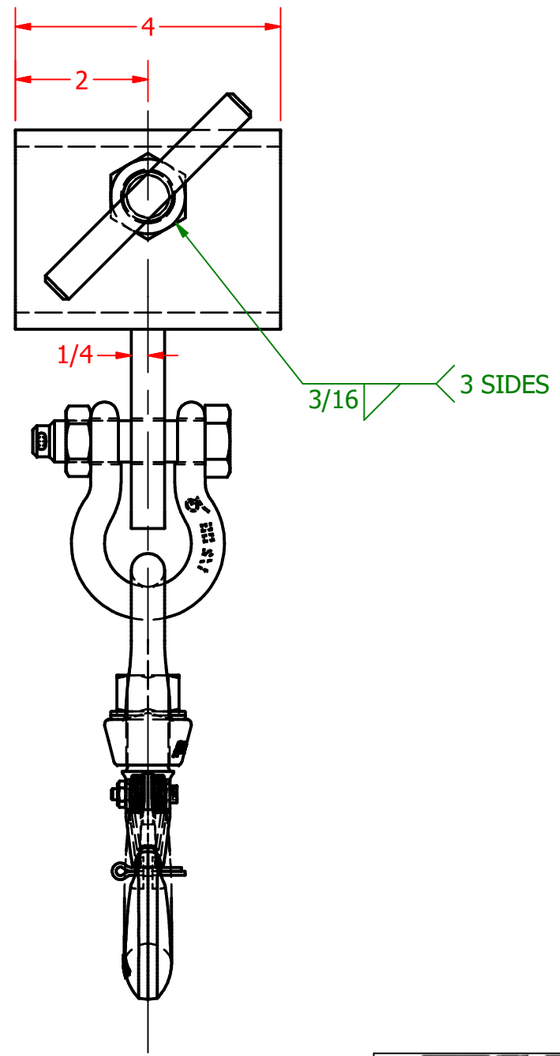

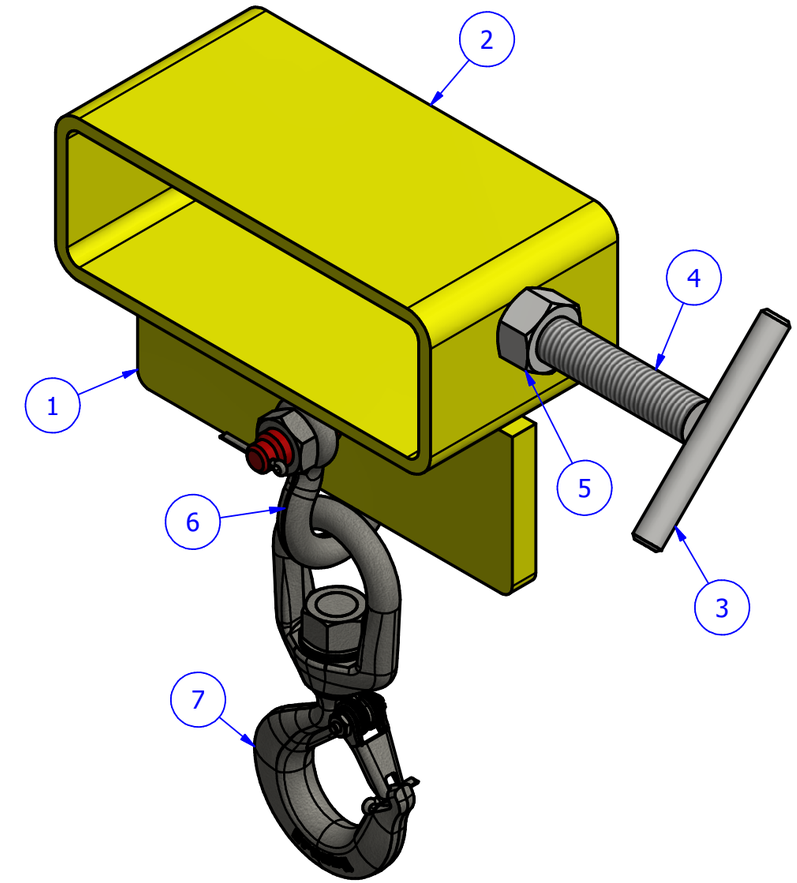

ALL DIMENSIONS ARE IN INCHES
UNLESS OTHERWISE SPECIFIED

ELT Inc. Engineered Lifting Technologies	3566 S. BENZING ROAD ORCHARD PARK, NY 14127 1-888-ELT-LIFT 1-888-358-5438	SCALE: NTS	APPROX WEIGHT: 13 LB
TOLERANCES *(UNLESS OTHERWISE SPECIFIED)*	DATE / NAME DRAWN 4/16/13 M. FILION REVISED	LHC-7 3,000 LB WLL	
LINEAR .X = ±.1 .XX = ±.01 .XXX = ±.005 .XXXX = ±.0005 FRACTIONS `1/16 ANGULAR ±.5º	DESIGN CATEGORY B SERVICE CLASS 1 2 OF 3	DWG NO	REV.

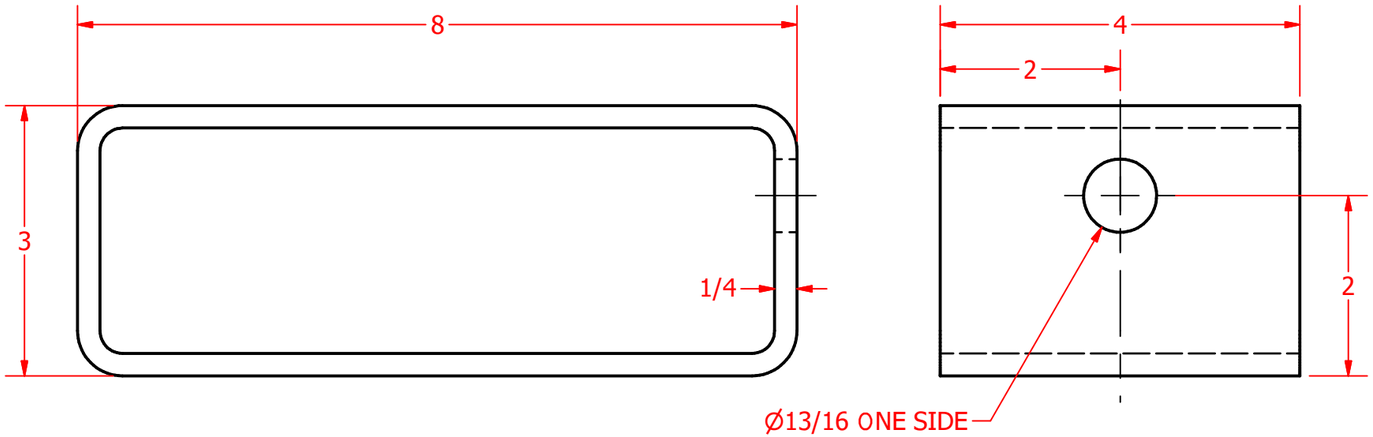

FORK TUBE
- ITEM 2 -
(1 REQUIRED)

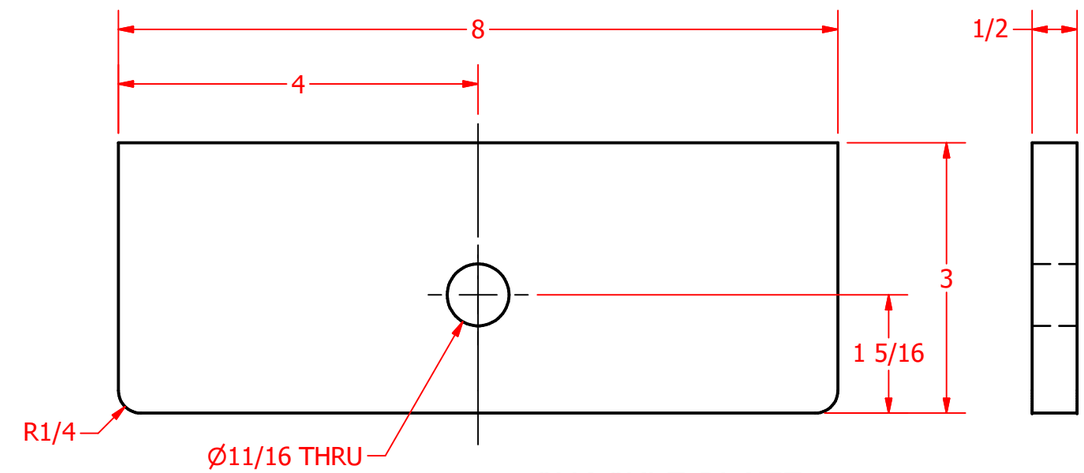

SHACKLE PLATE
- ITEM 1 -
(1 REQUIRED)

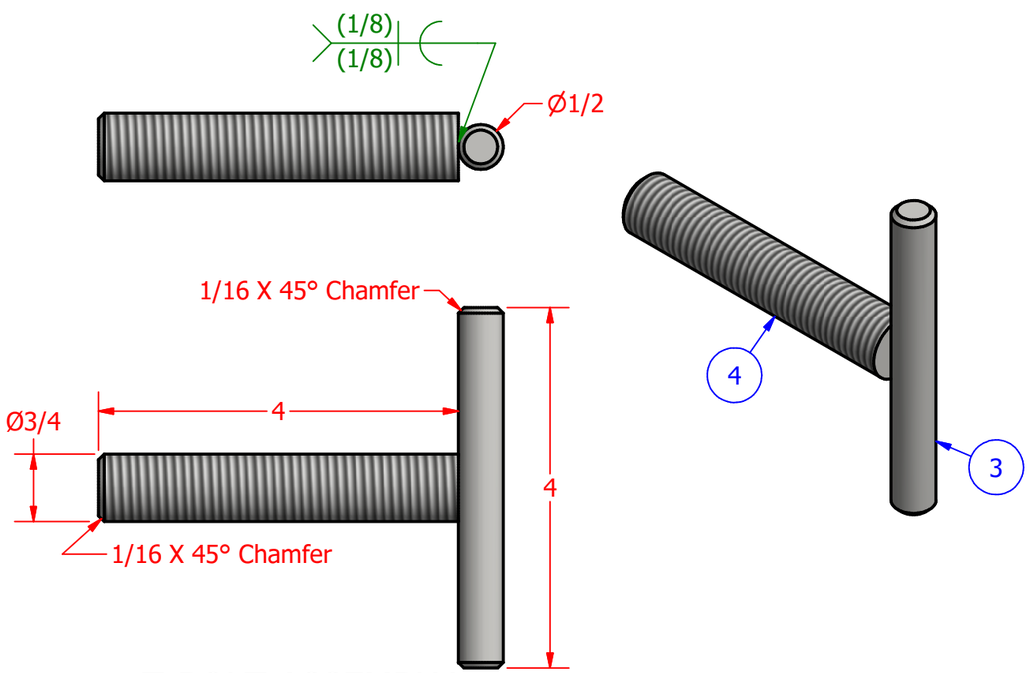

T-BOLT ASSEMBLY
(1 REQUIRED)

ALL DIMENSIONS ARE IN INCHES
UNLESS OTHERWISE SPECIFIED

ELT Inc. Engineered Lifting Technologies.	3566 S. BENZING ROAD ORCHARD PARK, NY 14127 1-888-ELT-LIFT 1-888-358-5438	SCALE: NTS	APPROX WEIGHT: NA
TOLERANCES *(UNLESS OTHERWISE SPECIFIED)*	DATE / NAME DRAWN 4/16/13 M. FILION REVISED	LHC-7 PARTS DETAILS	
LINEAR .X = ±.1 .XX = ±.01 .XXX = ±.005 .XXXX = ±.0005 FRACTIONS `1/16 ANGULAR ±.5º	DESIGN CATEGORY B SERVICE CLASS 1 3 OF 3	DWG NO	REV.